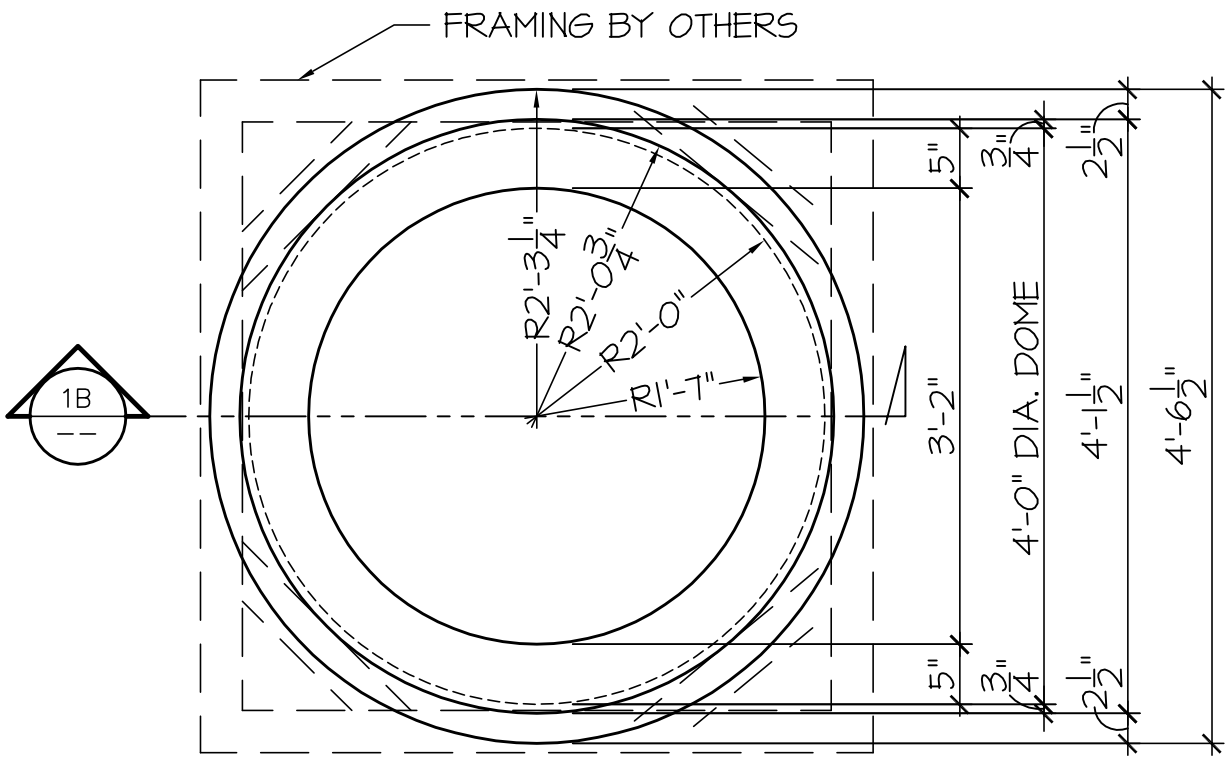


## 1A REFLECTED PLAN VIEW

SCALE : 3/4" = 1'-0"

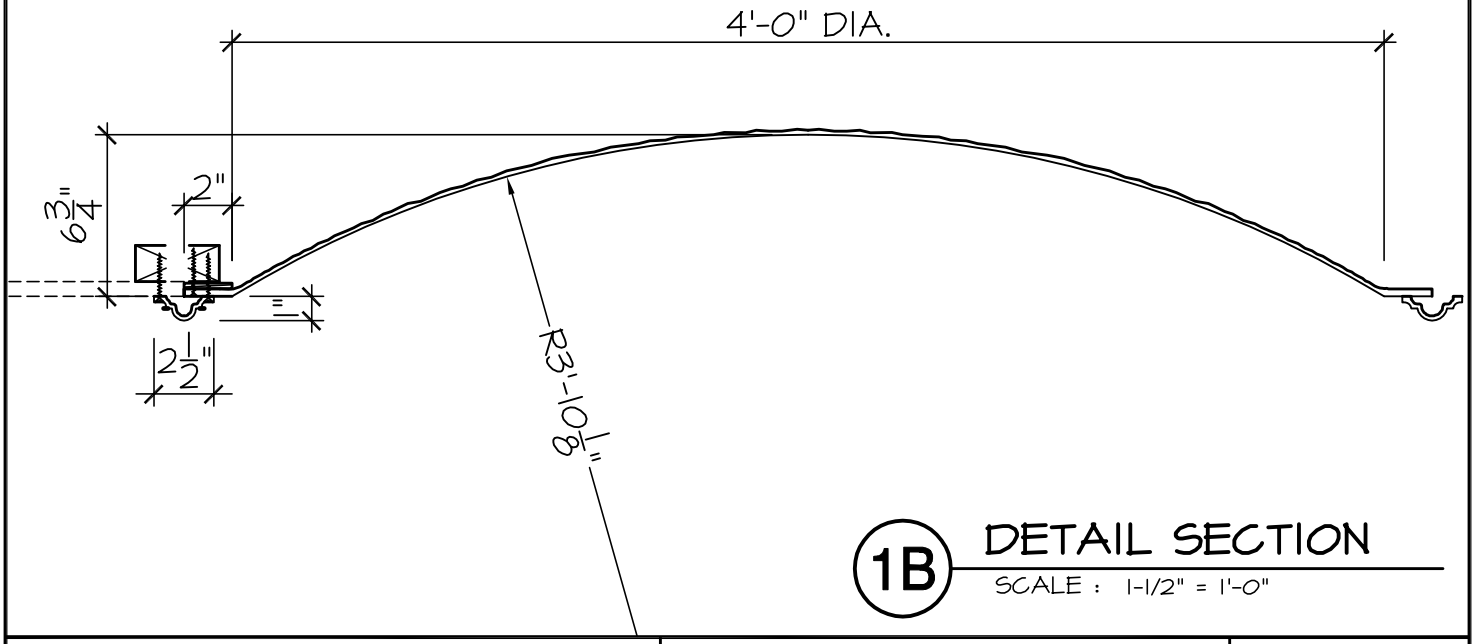


## 1B DETAIL SECTION

SCALE : 1-1/2" = 1'-0"


FIRST CLASS BUILDING PRODUCTS

1418 FENWICK DRIVE
MARIETTA, GA 30064

Phone 770.514.8141
Fax 770.514.0731


| | |
|---|---|
| PROJECT: | FIRST CLASS BUILDING PRODUCTS |
| JOB NO: | |
| TITLE: | GFRP DOME |
| TITLE: | 4'-0" DIAMETER |
| SCALE: | AS SHOWN |
| DRAWN BY: | LT |
| SHEET NO. | D-FC540 |
| PAGE | 4 OF 9 |