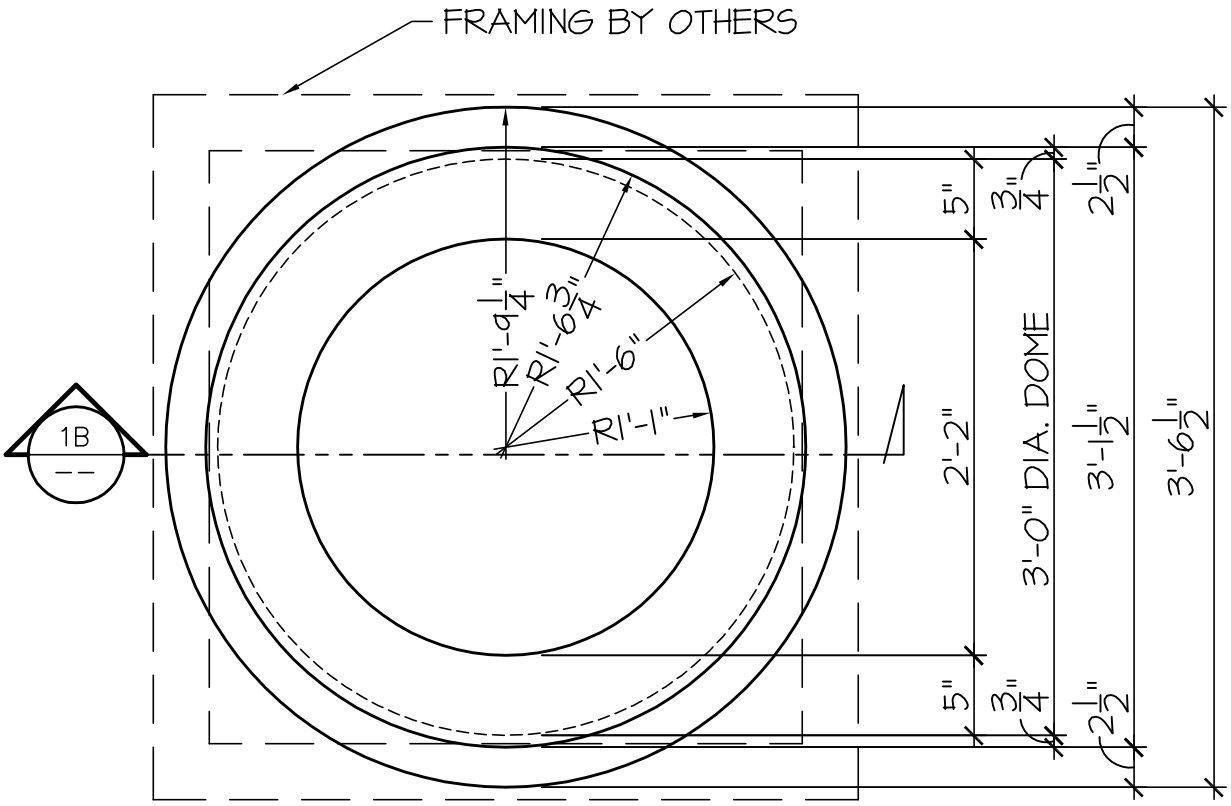

1A REFLECTED PLAN VIEW

SCALE : 1" = 1'-0"

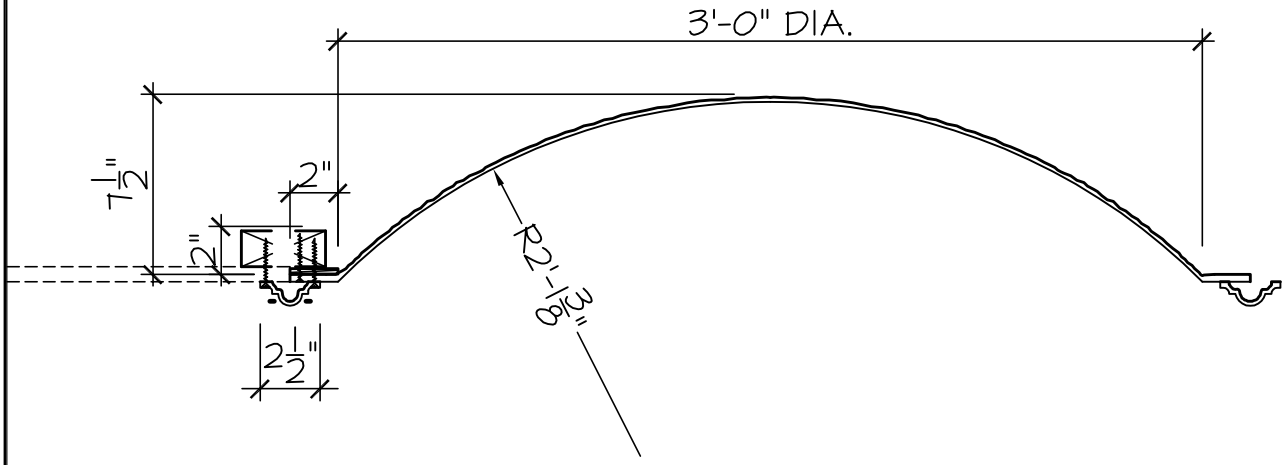

1B DETAIL SECTION

SCALE : 1-1/2" = 1'-0"

FIRST CLASS BUILDING PRODUCTS

1418 FENWICK DRIVE
MARIETTA, GA 30064

Phone 770.514.8141
Fax 770.514.0731

PROJECT:	FIRST CLASS BUILDING PRODUCTS
JOB NO:	
TITLE:	GFRP DOME
TITLE:	3'-0" DIAMETER
SCALE:	AS SHOWN
DRAWN BY:	LT
SHEET NO.	D-FC510
PAGE	1 OF 9